TOP VIEW
499-P43-20
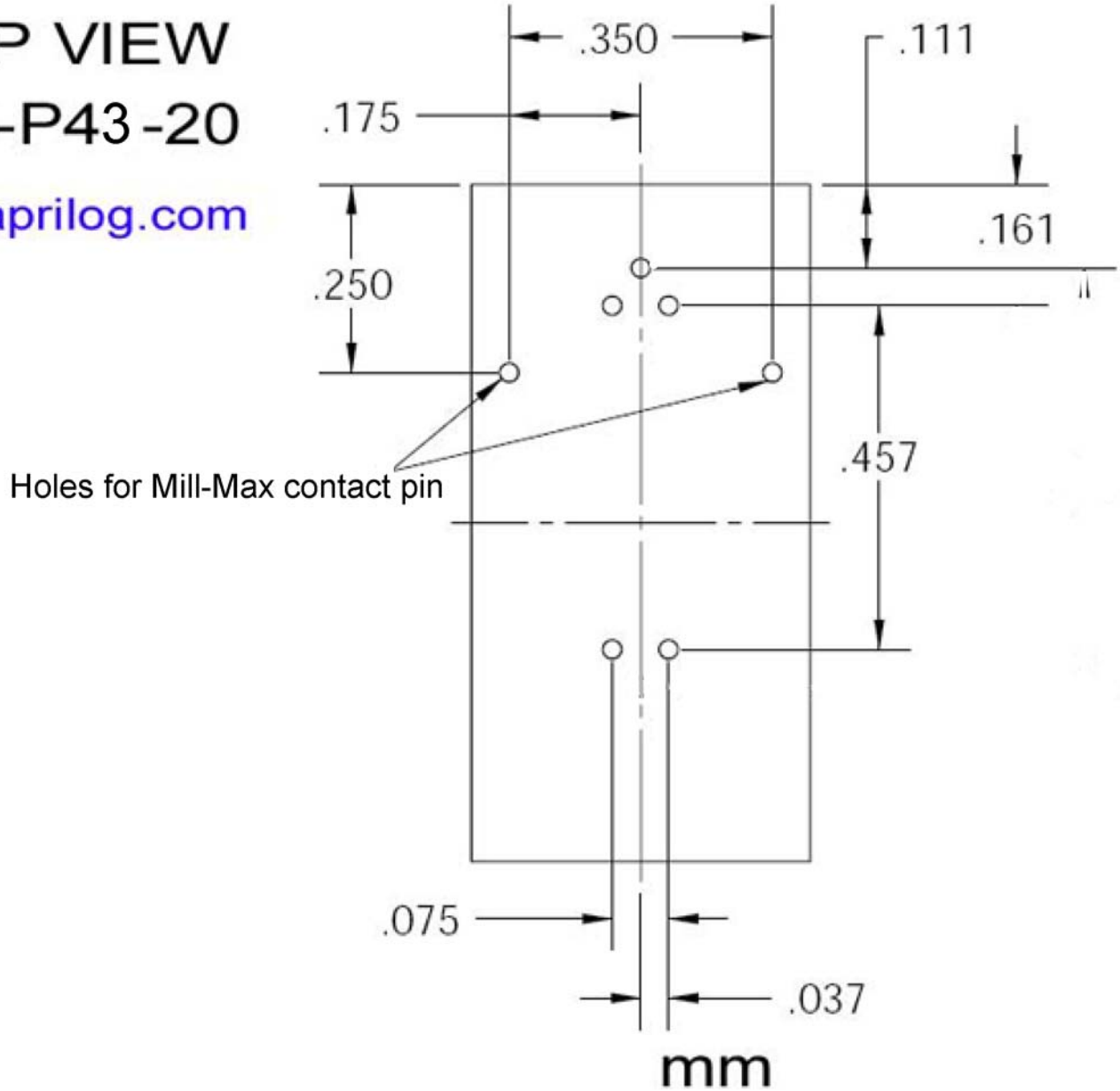
www.aprilog.com